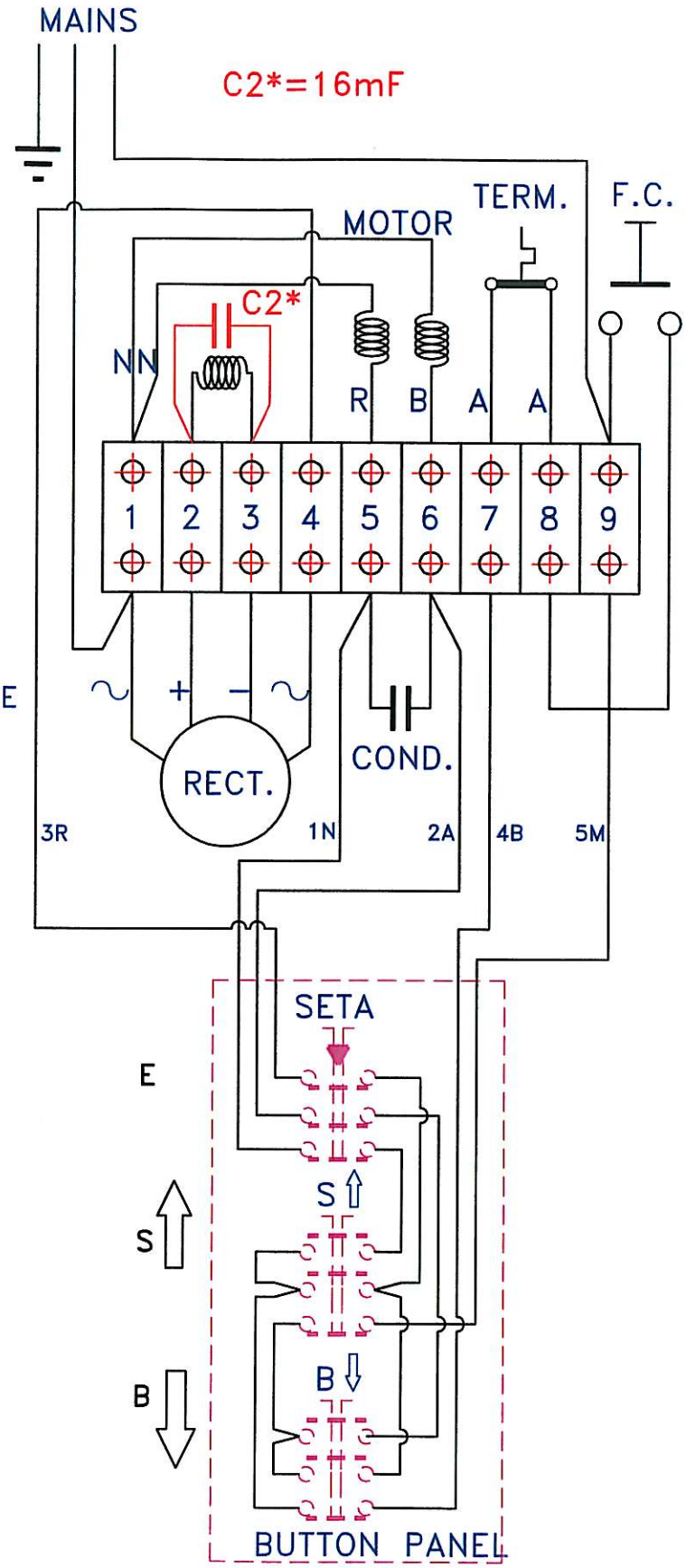


NOTE: IF THE LIFT AND LOWER CONTROLS WORK THE OPPOSITE SHOULD, CHANGE OVER THE BLACK MOTOR CABLES
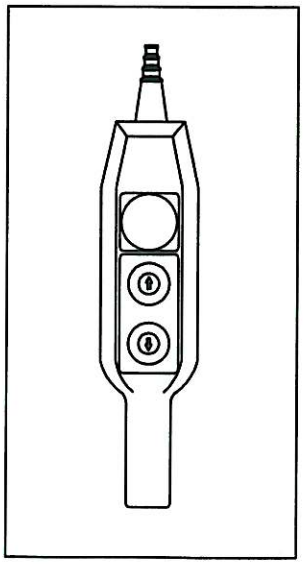
BUTTON PANEL W-5
REF.: 900395